常州市嘉传电子有限公司
Changzhou Jiachuan Electronics Co., Ltd.

SPECIFICATION FOR APPROVAL

产品规格承认书

JC-BUZ9505-A02 有源蜂鸣器 / Active Buzzer

Customer 客户	
Customer P/N 客户料号	
Supplier 供应商	常州市嘉传电子有限公司 Changzhou Jiachuan Electronics Co., Ltd.
Jiachuan P/N 嘉传型号	JC-BUZ9505-A02
Description 产品名称	有源蜂鸣器 / Active Buzzer
Main Specification 主要规格	3VDC | 2–5VDC | Min.80dB @10cm | 2700±300Hz
Issue Date 发行日期	2026-09-08
Revision 版本	A0

Approval / 签核

Prepared 制作	Checked 审核	Approved 批准	Company Seal 公司印章
李明珠	王敏娜	黄继桥	常州嘉传电子有限公司

Customer Confirmation / 客户确认

Signature / 签字：_____ Date / 日期：_____

常州市嘉传电子有限公司

Changzhou Jiachuan Electronics Co., Ltd.

PRODUCT SPECIFICATION / 产品规格内容

Model No.: JC-BUZ9505-A02	Date: 2026-09-08	Revision: A0

1. Mechanical Dimensions / 外形尺寸

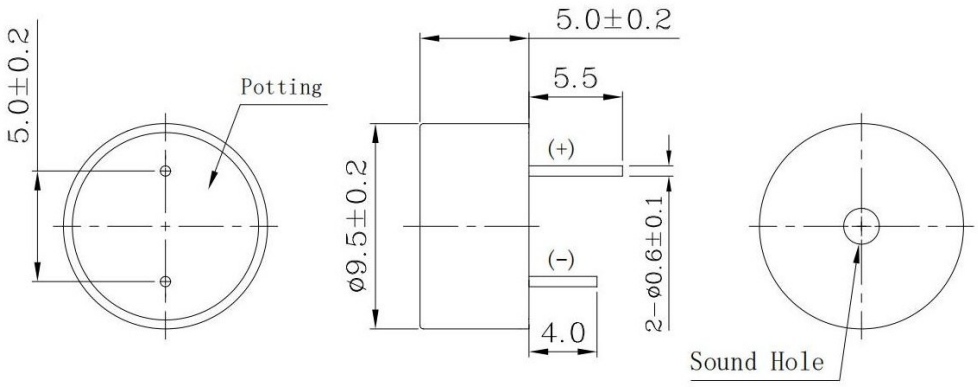

Unit: mm Tolerance: ±0.5

2. Electrical & Acoustic Specifications / 电气与声学规格

Item / 项目	Specification / 规格
Rated Voltage / 额定电压	3VDC
Operating Voltage / 工作电压	2–5VDC
Max. Rated Current / 最大额定电流	Max.30mA
Sound Pressure Level / 声压级	Min.80dB at 10cm
Resonant Frequency / 谐振频率	2700±300Hz
Operating Temperature / 工作温度	-20°C to +75°C
Storage Temperature / 储存温度	-30°C to +80°C
Case Material and Color / 外壳材料及颜色	PBT / Black

3. Measuring Condition / 测量条件

Part shall be measured under a condition (Temperature: 5–35°C, Humidity: 45%–85% R.H., Atmospheric pressure: 860–1060 hPa) unless the standard condition (Temperature: 25±3°C, Humidity: 60±10% R.H., Atmospheric pressure: 860–1060 hPa) is regulated to measure.

4. Acoustic Characteristics / 声学测试方法

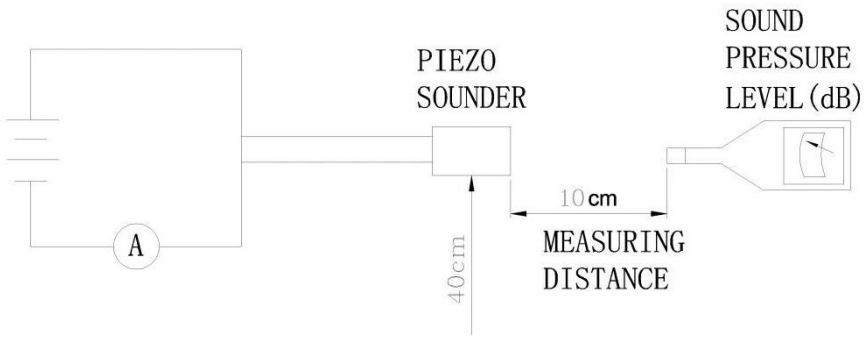

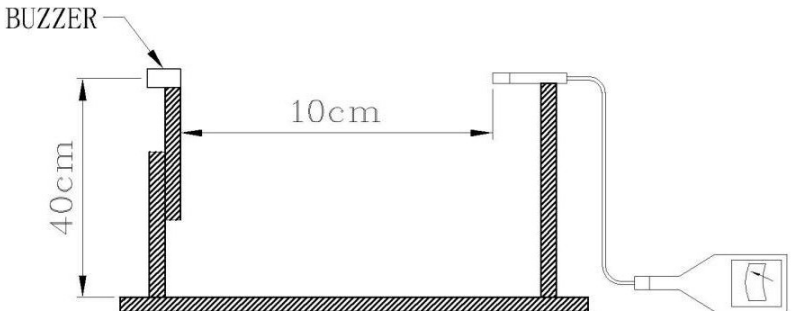

5. Typical Characteristic Curves / 典型特性曲线

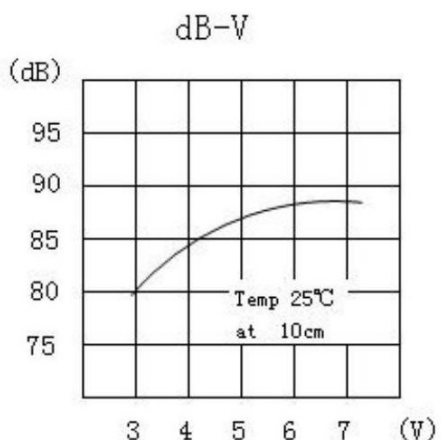

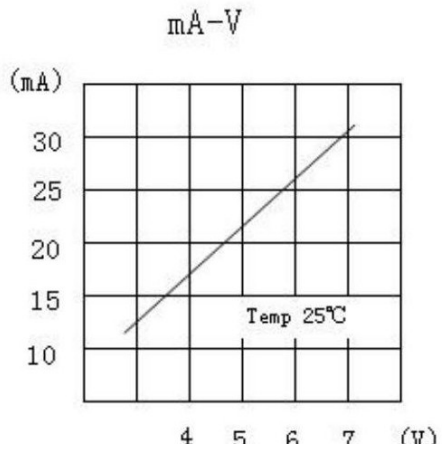

6. Reliability Test / 可靠性试验

After any following tests the part shall meet specifications without any degradation in appearance and performance except SPL. SPL shall not deviate more than -10 dB from the initial value.

1. Ordinary Temperature Life Test / 常温寿命试验	96 hours at 25±10°C; input rated voltage; resonant frequency; 1/2 duty square wave.
2. High Temperature Test / 高温试验	+80°C for 96 hours.
3. Low Temperature Test / 低温试验	-30°C for 96 hours.
4. Humidity Test / 湿热试验	+40°C ±3°C; 90%–95% RH; 48 hours; then room temperature for 6 hours.
5. Temperature Shock Test / 温度冲击试验	75°C / 1 hour → 25°C / 3 hours → -30°C / 1 hour → 25°C / 3 hours (1 cycle); total 10 cycles.
6. Drop Test / 跌落试验	Standard packaging from 120 mm; drop on hard wood or board of 5 cm thick, three sides, six planes.
7. Vibration Test / 振动试验	1000 cycles/min; amplitude 1.5 mm; duration 1 hour in each of 3 axes.
8. Solder Heat Resistance / 耐焊接热	Pins shall be immersed in molten solder maintained at 250±10°C for 30 seconds.

Note / 注意： As this product is not protected from foreign material entering, please make sure that magnetic powder, washing solvent, flux, corrosive gas and other foreign materials do not enter during production. Functional degradation (e.g. SPL down) may occur if foreign material enters.

7. Packing Requirement / 包装要求

按客户要求包装。 / Packaging according to customer requirements.