SPECIFICATION FOR APPROVAL

产品规格承认书

JC-MIC9752-UNI01 Ø9.7×H5.2 mm Unidirectional Back-Electret Condenser Microphone / 单指向驻极体背极式电容咪头

Item 项目	Information 信息
Customer 客户	
Customer P/N 客户料号	
Supplier 供应商	常州市嘉传电子有限公司 / Changzhou Jiachuan Electronics Co., Ltd.
Jiachuan P/N 嘉传型号	JC-MIC9752-UNI01
Description 产品名称	单指向驻极体背极式电容咪头 / Unidirectional Back-Electret Condenser Microphone
Main Specification 主要规格	Ø9.7×H5.2 mm | — | 1.5V | ≤0.68kΩ | 100–10,000Hz | S/N ≥58dBA
Issue Date 发行日期	2026-10-04
Revision 版本	A0

Approval / 签核

Prepared 制作	Checked 审核	Approved 批准	Company Seal 公司印章
李明珠	王敏娜	黄继桥	

Customer Confirmation / 客户确认

Customer Approval 客户承认	Date 日期

Product Specification / 产品规格

Model No.: JC-MIC9752-UNI01 Revision: A0

Scope / 适用范围

This specification applies to the unidirectional electret condenser microphone JC-MIC9752-UNI01. / 本规格适用于 JC-MIC9752-UNI01 单指向驻极体电容咪头。

Test Conditions / 测试条件

RL=0.68kΩ VS=1.5V TEMP=25°C±2°C Relative Humidity=65±5%

No.	Item / 项目	Symbol	Unit	Specification / 规格	Condition / 条件
1	Directivity / 指向性			Unidirectional	
2	Sensitivity / 灵敏度	S	dB	—	f=1kHz, 0dB=1V/Pa
3	Standard operating voltage / 标准工作电压	Vs	V	1.5	
4	Output impedance / 输出阻抗	Zout	kΩ	≤0.68	f=1kHz, 1Pa
5	Frequency / 频率范围		Hz	100–10,000	
6	Max operating voltage / 最大工作电压		V	10	
7	Sensitivity reduction / 灵敏度衰减	△S-Vs	dB	-3	f=1kHz, 1Pa; Vs=3.0VDC to 1.5VDC
8	Max. current consumption / 最大消耗电流	Idss	mA	≤0.5	
9	Signal to noise ratio / 信噪比	S/N	dBA	≥58	
10	Max input sound level / 最大输入声压级	SPL	dB	110	
11	Operation temp. / 工作温度		°C	-20~+60	
12	Storage temp. / 储存温度		°C	-30~+70	
13	Dimension / 外形尺寸		mm	Ø9.7×H5.2	See appearance drawing
14	Terminal / 端子			Terminal	See appearance drawing
15	Approvals / 认证			RoHs FCC	

Sensitivity reference: Pascal (Pa), 0dB=1V/Pa. Source note: Pa indication is 20dB higher than “ubar” indication.

Technical Drawings / 技术图

Typical Frequency Response Curve / 典型频率响应曲线

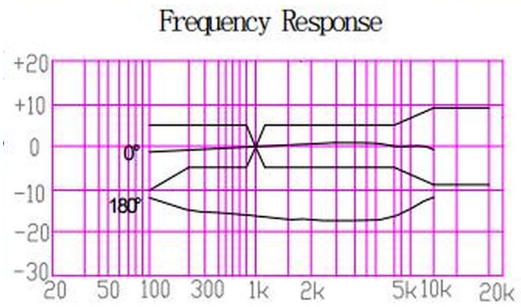

Microphone Response Tolerance Window

Frequency (Hz)	Lower Limit (dB)	Upper Limit (dB)
100	-5	5
200	-5	5
800	-5	5
1000	0	0
1200	-5	5
2000	-5	5
5000	-5	5
10000	-8	8

Appearance Drawing / 外观尺寸图

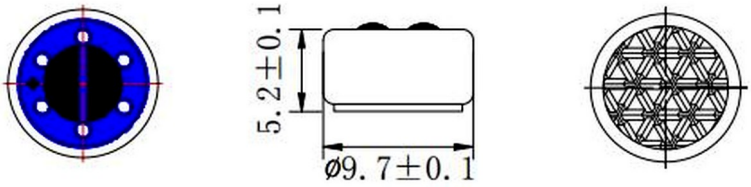

Measurement Circuit / 测量电路

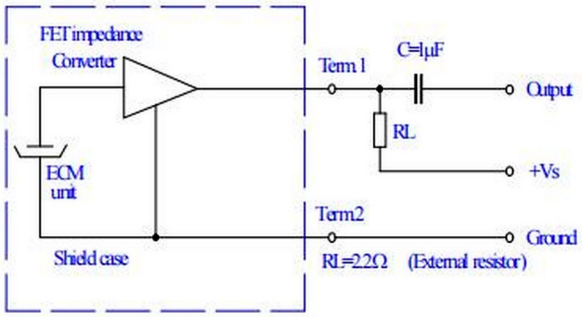

Exploded Drawing / 结构分解图

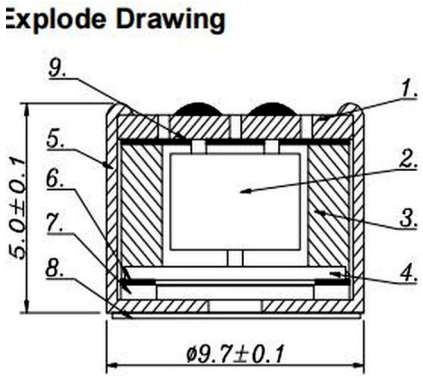

1	PCB	7	振膜
2	FET(三洋)	8	防尘网
3	腔体	9	阻尼纸
4	极板	10	
5	外壳	11	
6	垫片	12	

Component List / 部件表

No.	名称（中文）	Description (English)	No.	名称（中文）	Description (English)
1	PCB	PCB	7	振膜	Diaphragm
2	FET（三洋）	FET (Sanyo)	8	防尘网	Dust net
3	腔体	Cavity	9	阻尼纸	Damping paper
4	极板	Electrode plate	10		
5	外壳	Case	11		
6	垫片	Washer	12		

Reliability Test / 可靠性试验

Test / 试验	Condition / 条件
Vibration / 振动	Frequency: 10Hz~55Hz; Amplitude: 1.52mm; 1 octave/min; 2 hours in each of 3 axes
Dry Heat / 高温	+60±5°C for 96 hours
Dry Cold / 低温	-20±5°C for 96 hours
Damp Heat / 高温高湿	90%~95%RH, +60±5°C for 96 hours
Temperature Cycles / 温度循环	-20°C ↔ 25°C ↔ 60°C; (2h)(1h)(2h)(1h)(2h) ×10 cycles
Packing Drop / 跌落	Height 1m; 10 times from each of 3 axes
Temperature Impact / 温度冲击	-20°C ↔ 60°C; 30min / 30s / 30min ×10 cycles
Electrostatic Shock / 静电冲击	4000V(contact), 8000V(air) ×10 axes

Acceptance: after any test, sensitivity shall be within ±3dB of initial sensitivity after 3 hours conditioning at 20°C.

Soldering Condition / 焊接条件

7-1	Use 90W soldering iron / 使用 90W 烙铁。
7-2	Working surface temperature: 320±10°C / 烙铁工作表面温度 320±10°C。
7-3	ECM shall be soldered while embedded in a metal heat sink with good heat dissipation. / 焊接时将咪头嵌入散热能力强的金属块内。
7-4	Soldering time for each terminal: 2~3 sec. / 每个端子焊接时间 2~3 秒。
7-5	Pinhole after soldering shall be avoided. / 焊接后避免出现针孔。
7-6	Take ESD countermeasures; ground soldering iron, worktable and operator. / 采取静电防护措施，烙铁、工作台及人体可靠接地。

Shape of Heat Sink / 散热板形状

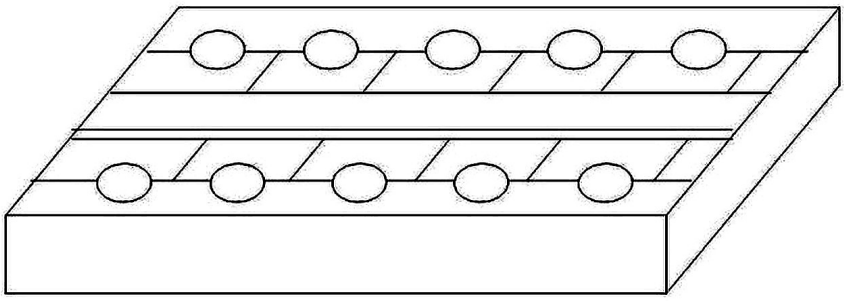

Shape of Hole at Fixed Part / 固定部孔形状

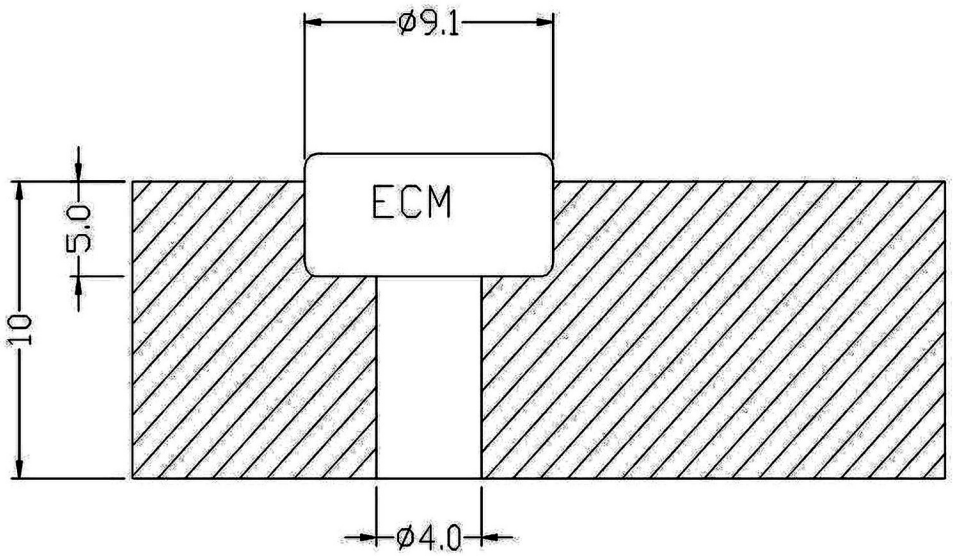

Packaging / 包装方式

按客户要求包装。 / Packaging according to customer requirements.